VISUAL STORYTELLING AS A CATALYST FOR HEALTH EQUITY AND COMMUNITY EMPOWERMENT

Nur Hikmah Fitriyah[1], Davide Benvenuti[2]

Nanyang Technological University, Singapore, Singapore
1,2 Nanyang Technological University, 50 Nanyang Avenue, 639798, Singapore
Email: hikmah001@e.ntu.edu.sg[1], dbenvenuti@ntu.edu.sg[2]

ABSTRACT

Medical animations are valuable tools for patient education, helping to bridge knowledge gaps in health literacy. However, unlike didactic animations, narrative-based patient education allows audiences to learn from patients' lived experiences. These stories go beyond medical facts, exploring the emotional, social, and mental aspects of illness, fostering empathy and influencing attitudinal and behavioural changes. Despite their potential, research on narrative animations in patient education remains limited, particularly in the fields of cancer and genetics. This study investigates how animated patient narratives can improve genetic literacy and engagement among racially diverse communities. Two animated narratives were developed through an interdisciplinary, iterative production process involving animators, clinicians, and patients. Each film featured characters from different racial backgrounds navigating hereditary cancer predisposition syndromes. Simplified diagrams were used to explain genetic inheritance and disease symptoms, to overcome health literacy barriers. Cultural motifs were incorporated to enhance relatability, and shared local elements, such as public transport (MRT), military service, and public housing (HDB), ensured that narratives transcended racial boundaries. Crucially, the narratives concluded positively to reinforce self-efficacy and encourage proactive health behaviours. The study, which involved 260 participants, assessed engagement, knowledge retention, and perceptions of racial representation. Findings showed increased understanding and interest in genetics, with audiences responding positively to racial representation and expressing openness to learning from characters outside their backgrounds. The results presented in this paper highlight how artistic storytelling can foster cultural specificity and shared understanding, positioning narrative animation as a powerful tool for inclusive health communication. This research contributes to the broader discourse on artistic research in public health, demonstrating its potential to shape more informed, resilient, and empathetic communities.

Keywords: Animated patient narratives, culturally sensitive patient education, Health equity, Visual storytelling

INTRODUCTION

Health literacy and education

Health status is a multifactorial outcome influenced by biological predispositions and socioeconomic determinants such as income, access to care, and education(Chelak & Chakole, 2023). Health literacy—the ability to obtain, understand, and use information to make informed health decisions and behaviour (Nutbeam & Lloyd, 2021)—has been found to mediate the relationship between socioeconomic status and health disparity(Stormacq et al., 2019). Thus, improving health literacy through accessible health education is a viable intervention for promoting health equity, especially among marginalised communities.

Traditional health education often adopts a didactic approach, where arguments are substantiated with empirical evidence to persuade behavioural change (Dudley et al., 2023). However, such methods typically lack emotional resonance and may be inaccessible to individuals with lower health or general literacy levels. To bridge this gap, there is a growing research field on narrative-based communication, where health information is embedded within stories that draw on lived experiences to foster empathy, increase engagement, and improve understanding (Adebayo et al., 2020; Dudley et al., 2023; Ma et al., 2025).

Narratives in health education are compelling because they help audiences move beyond the clinical aspects of the disease to engage with the illness's lived, emotional, and social dimensions. Indeed, this is the foundation of narrative medicine, which encourages clinicians and educators to acknowledge, interpret, and respond to patient stories to build trust, support shared decision-making, and humanise the clinical encounter (Murphy et al., 2017). Frank (1995) and Greenhalgh & Hurwitz (1999) have argued that stories shape not only what is known about illness but also how it is experienced, acted upon, and remembered.

Narrative communication has demonstrated greater persuasive power than purely expository forms, particularly in contexts that require emotional processing and attitudinal change. For instance, rural elders in South Korea reported greater understanding of diabetes and were more confident in performing health behaviours after undergoing narrative-based diabetes education (Lee & Lee, 2022). Additionally, a meta-analysis of 25 empirical studies exploring the effects of health narrative on persuasion showed a small but significant persuasive effect, especially concerning disease prevention and detection, such as cancer screenings (Shen et al., 2015).

The Power of Visual Storytelling in Health Education

While written narrative medicine is powerful, it may still pose accessibility barriers for those with lower literacy or narrative competence. A growing body of research has emerged to explore visual storytelling in health education to address this. Fields such as graphic medicine, which present healthcare discourse through comics and graphic novels, demonstrate how visual narratives can demystify complex concepts, foster reflection, and empower patient voices (Czerwiec et al., 2015). For instance, a scoping review of narrative-based health communication tools found that multimedia formats were more persuasive and accessible than purely written narratives, particularly among audiences with lower literacy levels (Dudley et al., 2023). Although comics can enhance health education clarity, their interpretation is not universal (Cohn, 2020). For example, individuals who belong to ethnic groups that do not have a strong tradition of reading comics, such as Aboriginal communities in Australia, have been shown to struggle with understanding sequential panel narratives (Roque & Rumsey, 2012).

In contrast, a systematic review of 15 studies found that animations, both didactic and narrative, improved short-term recall of health information among patients from middle- to high-income countries across various health settings, such as obtaining informed consent

before treatment (Hansen et al., 2024). Indeed, animated health narratives offer distinct advantages, as supported by multiple cognitive psychology theories. Its temporal nature allows for chunking of information into smaller, more digestible units, thus reducing the burden required for mental processing (Sweller, 1988, 2011). Furthermore, integrating narration, audio, visual and textual elements activated multiple information-processing pathways in the brain. This multimedia approach encourages connections between new information and existing knowledge, thus improving understanding and recall (Mayer, 2005; Mayer & Moreno, 2003). This is demonstrated by Onuora et al.'s (2021) a study which showed that frequent exposure to dramatised animated COVID-19 narratives was associated with better recall of health information among social media users in Nigeria.

Cultural Representation and Sensitivity

Cultural representation in healthcare refers to acknowledging and including diverse cultural backgrounds, beliefs, values and practices within the healthcare system (Kreuter & McClure, 2004). It involves understanding and respecting the cultural contexts of individuals and communities and ensuring that healthcare services are sensitive to their needs and preferences. This is especially important for promoting health equity by ensuring that all individuals, regardless of background, have fair access to information and services that support their well-being.

In the case of education, culturally sensitive health education, defined as the intentional and evidence-based adaptation of content to align with recipients' cultural backgrounds to improve the persuasiveness of messages, promotes health equity by increasing health literacy. While culturally sensitive health interventions have been associated with higher patient satisfaction, improved health outcomes, and increased adherence to treatment (Thomas et al., 2004), care is required when embedding culture into health education to avoid stereotyping or stigmatisation. As Griffith et al. (2024) warned, portraying racially minoritised populations as "other" or pathologically different can reinforce stigma rather than empowerment. Comparative messaging highlighting disparities, especially when framed around failure or deficiency, can induce shame or helplessness rather than motivate change. This is demonstrated by Nicholson et al.'s (2008) study which showed that education tools emphasising Black-White disparities in colon cancer outcomes resulted in more negative emotional reactions and decreased willingness to undergo screening, compared to tools that addressed colon cancer outcomes only within the African-American community.

Cultural sensitivity could be achieved by incorporating the experience, norms, behavioural patterns and values into health communication tools. Resnicow et al. (1999) proposed that cultural sensitivity could be adopted through surface structure and deep structure tailoring. Surface structure tailoring refers to incorporating observable characteristics of the community such as food, appearance and language. On the other hand, deep structure tailoring embeds culturally specific forces that influence health behaviours and outcomes, such as core values, norms, and stressors. While surface structure may appear superficial, increasing the interest and relevance of health education materials to the intended community is essential (Resnicow et al., 1999). A study conducted in Malaysia explored the acceptability of a culturally tailored video narrative intervention among stroke survivors(Appalasamy et al., 2020). Their qualitative results revealed that patients found the narratives engaging, comprehensive and informative.

As a multicultural society like Singapore, composed primarily of Chinese, Malay, and Indian ethnic groups, presents both a challenge and an opportunity for culturally attuned health communication. The Health Promotion Board (HPB) and the Ministry of Health have made deliberate efforts to reach diverse communities through translated materials and culturally

tailored campaigns. For example, *Our Community Spirit Dikir Barat* uses *dikir barat*—a Malay musical performance that combines rhythmic chanting, singing, and hand gestures—to promote reduced sugar and salt intake during the festive season (hpbsg, 2025). Another notable example is the use of mini-drama series aired around major holidays such as Chinese New Year, Hari Raya and Deepavali, where health messages are embedded within culturally resonant family narratives. The mini-series *Let's Break the Cycle* shares the story of an Indian family navigating a healthier lifestyle through reduced sugar, salt intake and an active lifestyle (hpbsg, 2024). The series adopted both surface structures, such as ethnic dishes, outfits and music, as well as deep structures, such as emphasis on family relationships.

The Health Issue: Hereditary Cancer and Genetic Testing

Cancer is a significant health concern worldwide, with 5-10% of all cancers linked to inherited genetic mutations (Hart et al., 2020). Identifying individuals at risk of developing a hereditary condition is crucial for early detection and prevention. Cascade genetic testing allows family members of a person diagnosed with a genetic condition to determine if they carry the same mutation, empowering at-risk individuals to make informed health decisions (Daly et al., 2023). However, in Singapore, the uptake of genetic testing remains lower than the global average (Courtney et al., 2019), thus limiting the potential for proactive healthcare. A qualitative study of 24 in-depth interviews revealed that high testing costs, perceived inability to cope with test results, and insufficient knowledge about genetic testing were some factors discouraging genetic testing among women in Singapore (Sun et al., 2020). Compared to the Chinese and Indian women, Malay women were more likely to present to the hospital at more advanced stages of cancer progression (Bhoo-Pathy et al., 2012). Focused group discussions among 27 Malay women in Singapore revealed that cultural values, reliance on traditional medicine, religious beliefs and family input strongly influenced decisions to undergo breast cancer screenings and genetic tests (Shaw et al., 2018). This underscores the critical need for patient education that is not only culturally sensitive but also emotionally resonant and accessible to diverse audiences.

Research Gap and Study Aims

There is a notable gap in research on the acceptability and effectiveness of animated patient narratives in improving genetic literacy in the Southeast Asian context. Few have explored how transdisciplinary, practice-based artistic research can create credible and immersive health education tools by combining visual storytelling, animated narratives and clinical insight, and inspired by patient experiences.

Shaffer et al. (2018) Identify three key components that determine narrative impact: audience interest (including realism and source credibility), involvement (through identification and empathy), and immersion (engagement and self-projection into the story). Building on this framework, this study investigates how narrative animation can address these dimensions while maintaining cultural specificity and cross-cultural resonance.

The study presented in this paper aims to 1) examine how transdisciplinary collaboration between animators and healthcare professionals can inform the creation of narrative-based animated patient education tools; 2) explore how cultural motifs—both surface and deep—can enhance the acceptability and relatability of culturally sensitive animated patient stories among a culturally diverse population, 3) compare the effects of different narrative styles (linear vs non-linear) on its effectiveness to engage and improve understanding Of genetics.

METHODS

Animation Design

The animation team collaborated with clinicians from the National Cancer Centre, Singapore, which included oncologists and genetic counsellors. Patient stories, gathered through past research and clinician observations, were used to inspire the narrative content of the animated short films. Through an iterative process, the team developed a framework to guide the design of the animated patient stories, leading to the creation of two short films with the following common elements:

1. The story features a specific racial group, but could resonate with a broad audience.
2. The story embeds a Singaporean localised narrative
3. The story had to promote a positive and empowering message, encouraging proactive health behaviours.

Following the development of the framework, the medical and animation teams collaborated to script and storyboard the animations. The animation's progression was subjected to rigorous review and discussion with healthcare professionals to guarantee the clinical accuracy and suitability of the animated content. The animation team integrated insights gained from these consultations, resulting in modifications that aligned the animations with identified preferences to enhance the overall efficacy of the visual narrative.

A consensus was made to feature two different cancer predisposition syndromes, Familial Adenomatous Polyposis (FAP) and Neurofibromatosis Type 1 (NF1) as they vary in clinical presentations, symptoms and age of onset. FAP is a genetic condition characterised by formations of thousands of polyps in the gastrointestinal tract (Lauricella et al., 2024). Patients with this condition have an increased risk of developing colorectal cancer. Thus, standard clinical practice involves regular screenings and surgery in adulthood to minimise cancer risk(Lauricella et al., 2024). Additionally, at-risk family members are advised to undergo genetic tests to determine their genetic predisposition to the condition. Like FAP, NF1 is a cancer predisposition syndrome that is detected through genetic testing. Symptoms typically manifest as bumps on the skin, called neurofibromas, which may be painful to the touch (Legius et al., 2021). While no cure is available, detecting this condition could help patients manage its symptoms.

The two films were designed with different narrative styles to investigate the role of narrative style on cognitive and emotional engagement. The NF1 film follows a linear narrative structure. In contrast, the FAP film adopts a non-linear structure, featuring a short whimsical animated sequence. Nonetheless, both films integrated a segment explaining the disease symptoms, the affected demographic, and the genetic mechanism. The filmmaking process and how culturally sensitive elements are inserted in the films have been extensively discussed in (Benvenuti & Spark, 2024).

Evaluation

Following the films' production, a mixed-methods survey was conducted to evaluate the effectiveness and acceptability of the animations in facilitating genetic health education among a culturally diverse Singapore population. Ethical approval was obtained from the SingHealth Centralised Institutional Review Board (Reference: 2024/2001).

Participants

The study recruited 260 participants, consisting of patients and the public, aged 21 or older, from the National Cancer Centre, Singapore (NCCS). Participants were recruited through convenience sampling and in the clinic waiting rooms within NCCS. Inclusion criteria include ethnicity, where participants had to be Chinese, Malay or Indian. Exclusion criteria

include the inability to read and understand English and give informed consent. Adhering to the ethical guidelines for research involving human subjects, all participants had to provide informed consent before they could be involved in the study.

Procedure

Potential participants in the clinic waiting rooms were first approached by the researcher and invited to participate. Details of the study would be extensively described to the participant, and any queries were clarified to ensure informed consent. Once informed consent was obtained, participants scanned a QR code to access the online survey on their phones or tablets. The survey consisted of three parts: a pre-test questionnaire, animation viewing, and a post-test questionnaire. Participants had to answer all questions before submitting the survey to prevent data missingness. Each participant watched both animations, but the viewing order was randomly assigned to control for order effects. To ensure participants watched the entire film, playback controls such as fast forward and pause were disabled. To compensate for their participation, participants were reimbursed with SGD10.

Survey measures

The medical research team developed a genetic literacy and perception of animation questionnaire. To evaluate the effectiveness of the animations, pre- and post-understanding and interest in genetics were measured using 5-point Likert scales.

Additionally, the two films were compared regarding informativeness, engagement, pace, appeal, and simplicity using a 7-point Likert scale in the post-test questionnaire. Wilcoxon signed-rank test was used to determine statistical significance of the result, which was set at $p<.05$. This test was chosen as the data was ordinal and collected within individuals. To understand participants' reception of the portrayal of ethnicity and culture in the animations, the post-test questionnaires include 5-point Likert scales assessing the acceptability of portraying different ethnicities and learning from animations featuring characters of other ethnicities.

The post-test survey also included two open-response questions to understand why participants preferred animation.

RESULTS

Animation A: NF-1

The film uses a straightforward narrative structure to share the story of a fictional Chinese boy, Alan, navigating life with NF1. The narrative begins with Alan's carefree childhood, where his playful spirit is symbolised by his habit of drawing on his skin (Figure 1A). His close bond with his Ah-ma (grandmother) is comforting, grounding him in familial warmth. However, as Alan grows older, his awareness of the visible bumps on his skin caused by NF1 intensifies, gradually eroding his self-esteem (Figure 1B). He is shown admiring the tattoos featured outside a tattoo parlour but quickly retreats with his hood pulled up in shame.

The scene transitions to a medical check-up in National Service—a significant rite of passage for all Singaporean males. During the consultation, a doctor suggests that Alan undergo genetic testing, explaining that he may have NF1. This moment introduces a brief explanatory sequence, where the doctor provides a simple overview of NF1's symptoms and genetic basis. Back home, Alan's quiet struggle is met with silent understanding. Sensing his discomfort, Ah-ma offers steady comfort and draws on his skin, echoing his childhood habit. The film culminates in a moment of transformation as Alan chooses to get a tattoo. Rather than serving as a mask, the tattoo symbolises his journey towards self-acceptance. This is strengthened by the acceptance shown by his Ah-ma and peers, despite the negative connotations of tattoos in the Asian culture.

This animation incorporates local and cultural visual motifs to enhance emotional resonance. Alan's military uniform, crew-cut hairstyle (Figure 1C), and HDB flat setting are distinctly Singaporean, while his interactions with Ah-ma are conducted in Mandarin, emphasising his Chinese cultural background (Figure 1D). Familial warmth is further highlighted through scenes of shared meals—a symbol of care. Even the Chinese calendar in the background reinforces cultural authenticity. Medical information is conveyed, with symptoms visualised through figures of small characters that look like hands, making the concepts accessible (Figure 2). An extract of the NF1 animation can be viewed here (https://vimeo.com/1024632499/0192158ebf?share=copy).



Figure 1

Representing lived experiences and cultural context in animation A (A) Young Alan playing with doodles scribbled on his skin. (B) Alan, in a hoodie to hide his symptoms, retreating from Ah-Ma's offering of food. (C) Alan confidently interacting with his peers during National Service, showing psychosocial resilience despite his condition. (D) Alan shares a meal with his Ah-ma (grandmother) in their flat. Both characters visibly display manifestations Neurofibromatosis Type 1 (NF1), emphasising the inherited nature of the condition and grounding the scene in a culturally specific, intergenerational context.

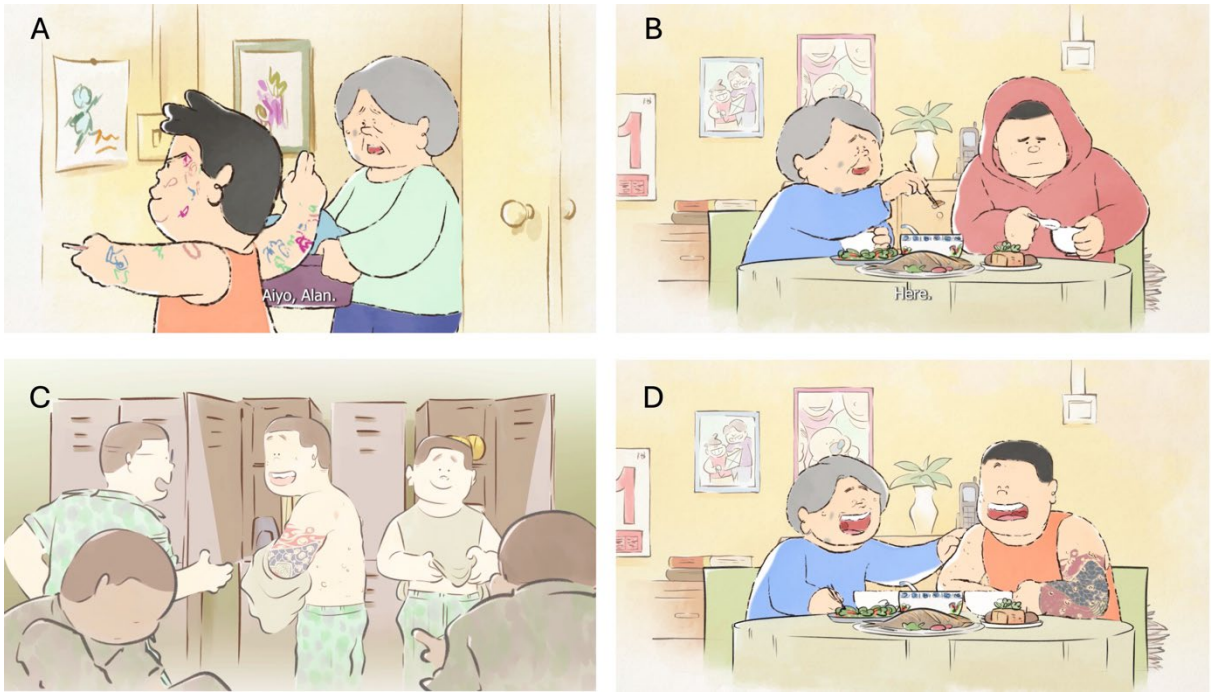

Figure 2

Representing medical concepts through simplified imagery (A) The genetic concept of Variable Penetrance was explained using simplified explanations and diagrams. (B) Different symptoms of NF1 through hand-shaped characters.

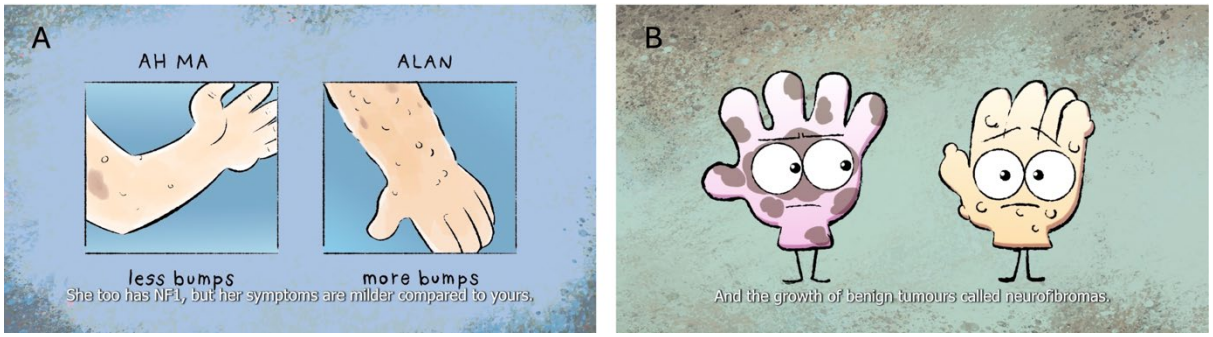

Animation B: FAP

The film opens at Tanah Merah MRT station, a recognisable Singaporean landmark. A Malay family, recognised by their attire and language, reveal their destination: a hospital. During the consultation, the doctor explains her medical condition to the protagonist, Fatirah. As the doctor explains the symptoms and treatment of FAP, Fatirah's growing anxiety transforms this experience into a surreal nightmare.

Her fear distorts reality into a chaotic dreamscape—grotesque representations of the colon and stomach become monstrous entities that chase her (Figure 3). Amid this turmoil, Fatirah encounters two guiding figures: Doc, marked by a cross, and Gen, symbolised by a DNA strand. They initiate a dramatic exorcism, using humour and exaggerated action to dispel the monsters.

Figure 3

Dramatised nightmare sequence (A) Fatirah encountering colon polyps with angry facial expressions. (B) Fatirah being chased by anthropomorphized grotesque stomach and colon. (C) Doc killing the anthropomorphized grotesque stomach and colon with a chainsaw. (D) Fatirah being afraid by Gen's dramatic exorcism and chanting.

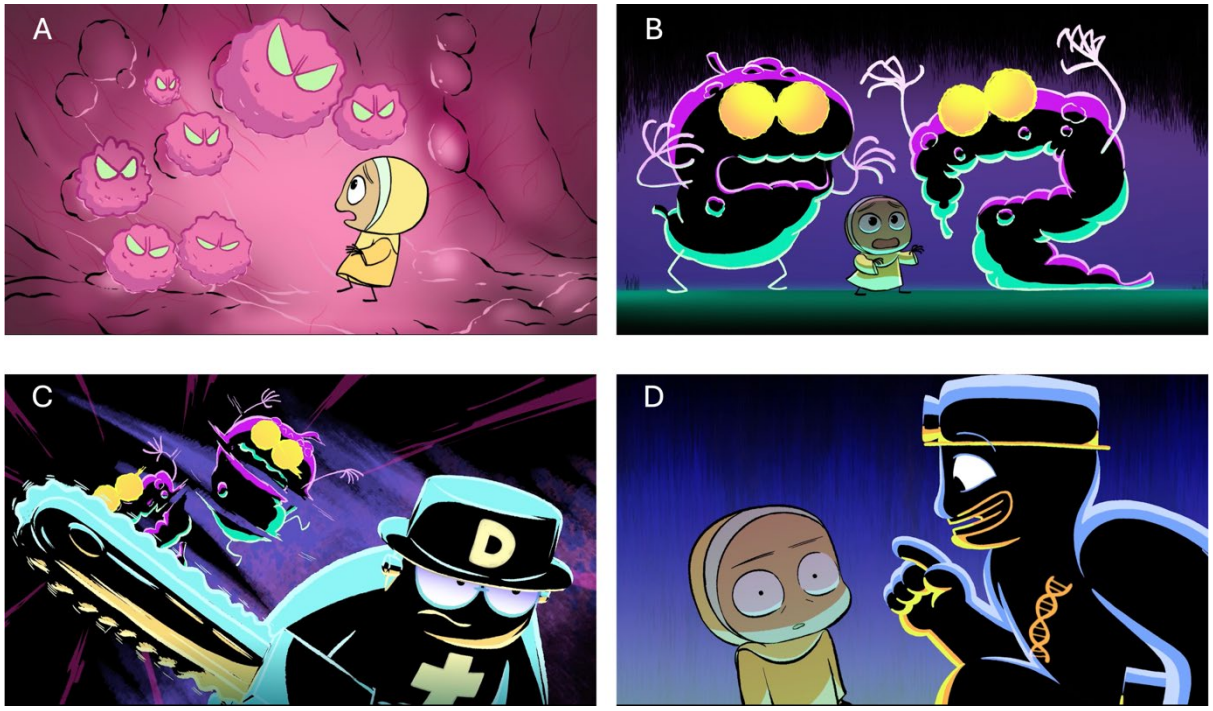

The film returns to reality, with Fatirah in tears—her imagination overwhelming her. The film transitions as Fatirah introduces herself directly to the audience, sharing her FAP condition. The animation clearly explains the hereditary nature of genetic conditions through a genogram. Unlike standard genograms, which use squares and circles, this version replaces them with character portraits, making the concept more accessible to audiences with different literacy levels (Figure 4). Complex genetics ideas are simplified further as the film refers to the inherited mutated genes as "boo boo genes." The film also illustrates common symptoms of FAP through short, relatable scenes set in a typical Singaporean HDB flat, grounding the information in a familiar local context.

Figure 4

Comparison of genogram formats used in patient education (A) A traditional medical genogram using standardised symbols and clinical annotations to represent family relationships and genetic mutations. (B) A still from Animation B, which uses stylised character headshots and illustrated representations of gene mutations to depict hereditary cancer risk in a more accessible format for patients.

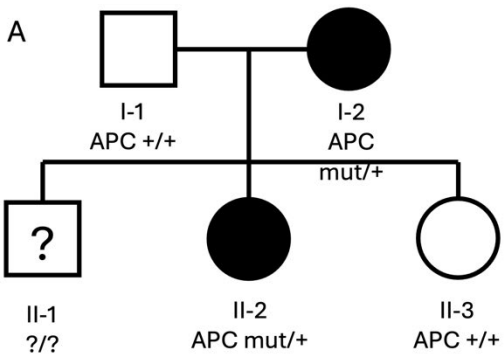

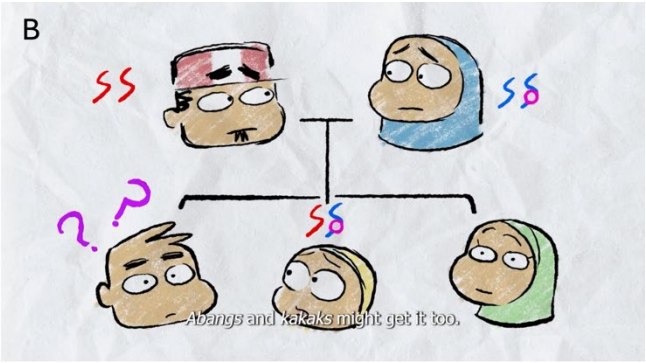

The final segment follows Fatirah as she takes charge of her health. Understanding her genetic risk for colon cancer, she adopts proactive health measures, including regular screenings and eventually preventative surgery.

Unlike Animation A, this animation adopts a more imaginative and symbolic narrative. This approach was designed to evaluate in the survey how the test subjects would respond to either the narrative or visual storytelling approach. An extract of the film is available here (https://vimeo.com/1071657530/1582bb9d94?share=copy).

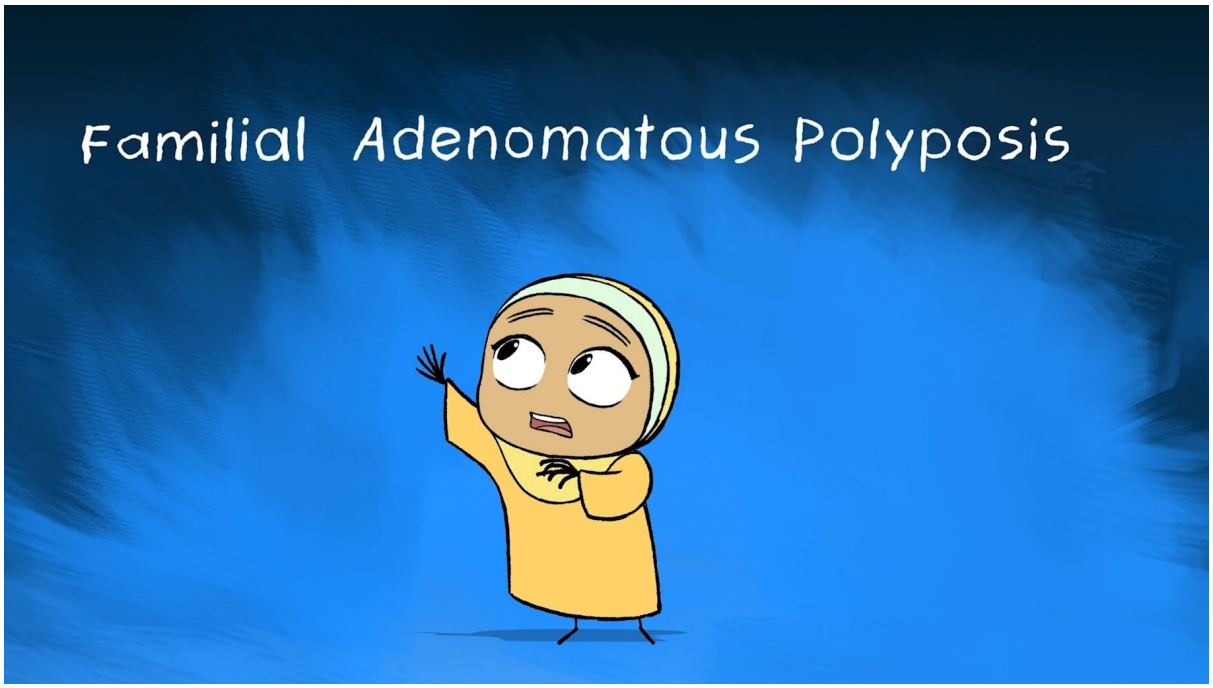

Participant demographics

A total of 301 participants were recruited into the evaluation study. Of these, only 260 participants completed the survey and were included in the final analysis, giving a response rate of 86.4%. The most common reason participants did not complete the survey was that they were called to their medical appointments before finishing it. Participants ranged in age from 21 to 79 years, with an average age of 44. Most participants were female (63.9%) and of Chinese ethnicity (66.2%). Most participants had no history of genetic testing (79.6%). In terms

of education, more than half of all participants had a bachelor's degree or higher (59.6%). The sample characteristics are summarised in Table 1.

Table 1. Demographics summary.

Characteristic		N	(%)
Gender			
	Male	94	(36.15%)
	Female	166	(63.85%)
Age		44	(14)
Race			
	Chinese	172	(66.15%)
	Malay	35	(13.46%)
	Indian	33	(12.69%)
	Others	20	(7.69%)
Education			
	Primary	4	(1.54%)
	Secondary	26	(10.00%)
	A Level/ Diploma/ ITE	72	(27.69%)
	Graduate	111	(42.69%)
	Post-graduate	44	(16.92%)
	Others	3	(1.15%)
History of genetic testing			
	No	207	(79.62%)
	Yes	53	(20.38%)
Income			
	Less than $2500	36	(13.85%)
	Between $2500 to $4999	66	(25.38%)
	Between $5000 to $7499	54	(20.77%)

More than $7500	37	(14.23%)
Unemployed/ Retired	67	(25.77%)

Effectiveness of animated patient stories in patient education

The results demonstrated a significant enhancement in participants' perceived understanding of genetics following their exposure to the animated narratives (V=545, p <.001). Participants also reported a substantial increase in their interest in genetics after viewing the animations (V=2125, p <.001).

Acceptability of cultural representation

The cultural representation within the animations was generally well-received. A substantial majority of participants (97.31%) found the portrayal of characters from different racial backgrounds to be somewhat to highly acceptable. Furthermore, 98.85% of participants reported being somewhat to highly receptive to learning genetic information from an animated narrative featuring a character of a different race.

Animation preference

Most participants (n = 159, 61.2%) expressed a preference for the dramatised Animation B animation over the straightforward Animation B. Quantitative comparisons between the two animations revealed that Animation B was rated significantly more informative than Animation A (V = 1095.5, p =.001) and was also perceived as more engaging (V = 2103, p = .025). However, no statistically significant differences were observed in participants' assessments of the animations' pacing, simplicity, or overall appeal.
Qualitative data showed that participants' preference was primarily due to its perceived effectiveness and emotional engagement. Both animations were found to be informative, precise, and engaging.

Among participants who preferred Animation A, they appreciated the linear structure, citing that it was "more straightforward and easier to grasp" (Participant 22, 33, Female, Chinese), compared to the dramatised Animation B, which "took longer to get to the point than the [Animation A] vid" (Participant 79, 24, Male, Malay). Participants also appreciated Animation A's heartwarming and hopeful tone, with some finding Animation B too dramatic and scary. As one participant described it, Animation A was "[h]eartwarming and not scaring the patient with the illness that she might get" (Participant 83, 44, Female, Chinese). Similarly, Participant 93 (35, Female, Chinese) stated that Animation B "felt more scary and taunting with the dark images than the first animation, which is softer in tone."

Among those who preferred Animation B, they appreciated that it was more informative and offered "[m]ore detailed explanations, more relevant to genetics testing" (Participant 96, 23, Female, Chinese). As one participant described it, "and details what she should do to maintain her health, eg with regular check-ups. So it was a bit more informative on the action steps after receiving a positive diagnosis of having that faulty gene" (Participant 3, 27, Female, Chinese). Additionally, participants appreciated Animation B because it has more dialogue and explanation than Animation A. One participant expressed it this way:

Animation B had "more explanation and better soundtrack matching. NF1 video less talking, honestly, I feel like u need to WANT to understand the deeper meaning behind the video to learn what it is trying to say. compared to FAP, there's alot of explanation and

simplifying terms which would make it easier to understand what it's trying to say." (Participant 71, 21, Female, Chinese)

Participants also found Animation B more engaging, with the protagonist often described as cute, and endearing. Participants also appreciated the story told through the lens of a child, with many empathising with the character's fears. One participant found that Animation B "more engaging and was more appealing when told from a kid's perspective - her fears and acceptance as she ages was more relatable" (Participant 53, 47, Female, Indian).

The qualitative data also revealed a more nuanced response regarding the portrayal of tattoos within Animation A. While a few "like[d] the part where grandma accept the tattoo" (Participant 232, 47, Female, Chinese) and found it "[m]ore realistic, especially the tattoos which happens in real life even though it's not approved by many parents and society itself" (Participant 220, 75, Female, Sri Lankan). However, some participants disapproved of the use of tattoos, citing that "using tattoos as a solution isn't a good choice" (Participant 85, 30, Male, Chinese).

DISCUSSION

This study demonstrates the potential of culturally tailored animated patient education as an accessible and engaging medium for improving genetic literacy, particularly in contexts where cultural values shape attitudes towards illness, testing, and health decision-making. In Southeast Asia, where conversations around genetics and cancer may be sensitive or stigmatised, animation offers a uniquely expressive and accessible mode of communication. Despite the importance of cultural framing in patient education, research is scarce exploring the use of culturally nuanced animated storytelling for genetic education in this region. Our study addresses this gap by showcasing how interdisciplinary collaboration between clinicians and art practitioners can produce emotionally resonant and informative patient educational tools.

Quantitative and qualitative findings affirm that both animations effectively enhanced perceived understanding and interest in genetics, even among participants without a university education. This indicates the medium's accessibility across literacy levels and highlights its potential for broad community outreach. Participants described the films as informative, engaging, and easy to understand, which echoes earlier work done in the UK Kirk et al. (2016).

Between the two narrative structures tested, the dramatised Animation B emerged as more emotionally compelling, including the nightmare sequence, depicting the anxiety commonly experienced during medical consultations, enhanced audience empathy and engagement. This speaks to animation's capacity not merely to inform, but to foster affective understanding. It illustrates how art can be mobilised to communicate the emotional dimensions of healthcare, amplifying the patients' lived experiences and creating deeper resonance within diverse audiences.

The study also explored the cultural reception of character representation within a muti-ethnic Southeast Asian context. With an ethnically representative sample from Singapore, results indicated broad acceptance of the animations, including portrayals of ethnically diverse characters. Importantly, participants expressed openness to receiving genetic information through animations involving people of different ethnicities, underscoring the animations' potential to transcend identity markers and foster inclusivity in a pluralistic society. However, one creative choice—depicting a character with tattoos based on a real patient's coping strategy—elicited mixed responses. In Singapore, tattoos carry complex social connotations, often associated with deviance or religious disapproval(Nasir, 2016). The team's decision to include this element involved deep deliberation, reflecting the challenges of crafting authentic and culturally sensitive narratives.

Ultimately, this study shows how co-designing patient education materials with sensitivity to narrative, cultural context, and emotional resonance aligns with broader ambitions of artistic research: to contribute to building more empathetic, resilient, and health-literate communities. While this project involved a rich collaboration between clinicians and creative practitioners, future work could expand participatory practices to include patients more directly in the creative process. Doing so would enhance authenticity and democratise the research process, positioning patients as active co-creators of patient education tools that inform and shape community understanding. Additionally, future research could explore how interdisciplinary collaboration between artists and healthcare professionals can extend the reach of culturally sensitive animated patient stories—not only across racial boundaries, but also to address the needs of vulnerable populations, such as individuals with cognitive impairments. This would further strengthen the inclusive and transformative potential of such creative interventions in patient education.

A limitation of the study was potential bias in the sample population due to convenience sampling. While efforts were made to recruit a diverse sample pool, there was a risk of self-selection bias, with individuals who are more interested in health communication and digital media being more likely to participate.

CONCLUSION

This study demonstrates the value of animated patient narratives as accessible and culturally resonant tools for improving genetic literacy. Combining clinical insights with local storytelling elements, the animations engaged diverse audiences and promoted understanding across cultural lines. This project contributes to more inclusive approaches to patient education. It highlights the potential of visual storytelling to foster empathy, promote health equity, and empower communities to engage with complex medical information in emotionally and culturally meaningful ways.

ACKNOWLEDGEMENT

The paper's authors would like to thank all the artists who contributed to the project, especially research assistant and artist Yap Wei Ying (Stella). We also thank the LKC School of Medicine of Singapore and the National Cancer Centre of Singapore.

The authors also acknowledge the support of the School of Art, Design and Media (ADM) at Nanyang Technological University (NTU), Singapore.

This research project is supported by the Ministry of Education, Singapore, under its Academic Research Fund Tier 1 RG96/21:

“Patient Stories: Animation and visual storytelling for the communication of complex genomic concepts to reduce cultural and language barriers” Pi Assoc Prof Davide Benvenuti and Co-Pi Assoc Prof Joanne Ngeow Yuen Yie.

REFERENCES

Adebayo, A. L., Davidson Mhonde, R., DeNicola, N., & Maibach, E. (2020). The Effectiveness of Narrative Versus Didactic Information Formats on Pregnant Women's Knowledge, Risk Perception, Self-Efficacy, and Information Seeking Related to Climate Change Health Risks. *International Journal of Environmental Research and Public Health*, *17*(19), 6969. https://doi.org/10.3390/ijerph17196969

Appalasamy, J. R., Joseph, J. P., Seeta Ramaiah, S., Md Zain, A. Z., Quek, K. F., & Tha, K. K. (2020). Video Narratives Intervention Among Stroke Survivors: Feasibility and Acceptability Study of a Randomized Controlled Trial. *JMIR Aging*, *3*(2), e17182. https://doi.org/10.2196/17182

Benvenuti, D., & Spark, A. (2024). *Animating patient stories for medical education: The power of personified storytelling*. https://dr.ntu.edu.sg/handle/10356/182308

Betsch, C., Böhm, R., Airhihenbuwa, C. O., Butler, R., Chapman, G. B., Haase, N., Herrmann, B., Igarashi, T., Kitayama, S., Korn, L., Nurm, Ü.-K., Rohrmann, B., Rothman, A. J., Shavitt, S., Updegraff, J. A., & Uskul, A. K. (2016). Improving Medical Decision Making and Health Promotion through Culture-Sensitive Health Communication: An Agenda for Science and Practice. *Medical Decision Making: An International Journal of the Society for Medical Decision Making*, *36*(7), 811–833. https://doi.org/10.1177/0272989X15600434

Bhoo-Pathy, N., Hartman, M., Yip, C.-H., Saxena, N., Taib, N. A., Lim, S.-E., Iau, P., Adami, H.-O., Bulgiba, A. M., Lee, S.-C., & Verkooijen, H. M. (2012). Ethnic Differences in Survival after Breast Cancer in South East Asia. *PLOS ONE*, *7*(2), e30995. https://doi.org/10.1371/journal.pone.0030995

Chelak, K., & Chakole, S. (2023). The Role of Social Determinants of Health in Promoting Health Equality: A Narrative Review. *Cureus*. https://doi.org/10.7759/cureus.33425

Cohn, N. (2020). Visual narrative comprehension: Universal or not? *Psychonomic Bulletin & Review*, *27*(2), 266–285. https://doi.org/10.3758/s13423-019-01670-1

Courtney, E., Chok, A. K.-L., Ting Ang, Z. L., Shaw, T., Li, S.-T., Yuen, J., & Ngeow, J. (2019). Impact of free cancer predisposition cascade genetic testing on uptake in Singapore. *Npj Genomic Medicine*, *4*(1), 1–7. https://doi.org/10.1038/s41525-019-0096-5

Czerwiec, M., Williams, I., Squier, S. M., Green, M. J., Myers, K. R., & Smith, S. T. (2015). *Graphic Medicine Manifesto* (Vol. 1). Penn State University Press. https://doi.org/10.5325/j.ctv14gpf04

Daly, M. B., Pal, T., Maxwell, K. N., Churpek, J., Kohlmann, W., AlHilli, Z., Arun, B., Buys, S. S., Cheng, H., Domchek, S. M., Friedman, S., Giri, V., Goggins, M., Hagemann, A., Hendrix, A., Hutton, M. L., Karlan, B. Y., Kassem, N., Khan, S., … Darlow, S. D. (2023). NCCN Guidelines® Insights: Genetic/Familial High-Risk Assessment: Breast, Ovarian, and Pancreatic, Version 2.2024. *Journal of the National Comprehensive Cancer Network: JNCCN*, *21*(10), 1000–1010. https://doi.org/10.6004/jnccn.2023.0051

Dudley, M. Z., Squires, G. K., Petroske, T. M., Dawson, S., & Brewer, J. (2023). The Use of Narrative in Science and Health Communication: A Scoping Review. *Patient Education*

and Counseling, *112*, 107752. https://doi.org/10.1016/j.pec.2023.107752

Frank, A. W. (1995). *The Wounded Storyteller: Body, Illness, and Ethics*. University of Chicago Press.

Greenhalgh, T., & Hurwitz, B. (1999). Narrative based medicine: Why study narrative? *BMJ (Clinical Research Ed.)*, *318*(7175), 48–50. https://doi.org/10.1136/bmj.318.7175.48

Griffith, D. M., Efird, C. R., Baskin, M. L., Webb Hooper, M., Davis, R. E., & Resnicow, K. (2024). Cultural Sensitivity and Cultural Tailoring: Lessons Learned and Refinements After Two Decades of Incorporating Culture in Health Communication Research. *Annual Review of Public Health*, *45*(1), 195–212. https://doi.org/10.1146/annurev-publhealth-060722-031158

Hansen, S., Jensen, T. S., Schmidt, A. M., Strøm, J., Vistisen, P., & Høybye, M. T. (2024). The Effectiveness of Video Animations as a Tool to Improve Health Information Recall for Patients: Systematic Review. *Journal of Medical Internet Research*, *26*, e58306. https://doi.org/10.2196/58306

Hart, S. N., Polley, E. C., Yussuf, A., Yadav, S., Goldgar, D. E., Hu, C., LaDuca, H., Smith, L. P., Fujimoto, J., Li, S., Couch, F. J., & Dolinsky, J. S. (2020). Mutation prevalence tables for hereditary cancer derived from multigene panel testing. *Human Mutation*, *41*(8), e1–e6. https://doi.org/10.1002/humu.24053

Houston, T. K., Allison, J. J., Sussman, M., Horn, W., Holt, C. L., Trobaugh, J., Salas, M., Pisu, M., Cuffee, Y. L., Larkin, D., Person, S. D., Barton, B., Kiefe, C. I., & Hullett, S. (2011). Culturally Appropriate Storytelling to Improve Blood Pressure. *Annals of Internal Medicine*, *154*(2), 77–84. https://doi.org/10.7326/0003-4819-154-2-201101180-00004

hpbsg (Director). (2024, October 7). *Let's Break the Cycle – Capsule 1 – சுழற்சியை உடைப்போம்* [Video recording]. https://www.youtube.com/watch?v=9waGwRUCtwk

hpbsg (Director). (2025, April 15). *Our Community Spirit Dikir Barat—Full Performance #GoGotongRoyongGo* [Video recording]. https://www.youtube.com/watch?v=7Lo_h9SjdU4

Joshi, A., Kale, S., Chandel, S., & Pal, D. (2015). Likert Scale: Explored and Explained. *British Journal of Applied Science & Technology*, *7*(4), 396–403. https://doi.org/10.9734/BJAST/2015/14975

Kirk, M., Iredale, R., Morgan, R., & Tonkin, E. (2016). Chapter 9—Engaging and Empowering Public and Professionals in Genomics. In D. Kumar & R. Chadwick (Eds.), *Genomics and Society* (pp. 165–192). Academic Press. https://doi.org/10.1016/B978-0-12-420195-8.00009-4

Kreuter, M. W., & McClure, S. M. (2004). The role of culture in health communication. *Annual Review of Public Health*, *25*, 439–455. https://doi.org/10.1146/annurev.publhealth.25.101802.123000

Lauricella, S., Rausa, E., Pellegrini, I., Ricci, M. T., Signoroni, S., Palassini, E., Cavalcoli, F., Pasanisi, P., Colombo, C., & Vitellaro, M. (2024). Current management of familial adenomatous polyposis. *Expert Review of Anticancer Therapy*, *24*(6), 363–377.

https://doi.org/10.1080/14737140.2024.2344649
Lee, S. S., & Lee, D. S. (2022). The Development and Effect of a Storytelling Based Diabetes Education Material: Focus on Rural Elderly with Diabetes. *Korean Journal of Health Promotion*, *22*(2), 113–122. https://doi.org/10.15384/kjhp.2022.22.2.113
Legius, E., Messiaen, L., Wolkenstein, P., Pancza, P., Avery, R. A., Berman, Y., Blakeley, J., Babovic-Vuksanovic, D., Cunha, K. S., Ferner, R., Fisher, M. J., Friedman, J. M., Gutmann, D. H., Kehrer-Sawatzki, H., Korf, B. R., Mautner, V.-F., Peltonen, S., Rauen, K. A., Riccardi, V., … Plotkin, S. R. (2021). Revised diagnostic criteria for neurofibromatosis type 1 and Legius syndrome: An international consensus recommendation. *Genetics in Medicine*, *23*(8), 1506–1513. https://doi.org/10.1038/s41436-021-01170-5
Ma, H., Law, E. L.-C., Sun, X., Yang, W., He, X., Lawson, G., Zheng, H., Wang, Q., Li, Q., & Yuan, X. (2025). Towards empathic medical conversation in Narrative Medicine: A visualization approach based on intelligence augmentation. *International Journal of Human-Computer Studies*, *199*, 103506. https://doi.org/10.1016/j.ijhcs.2025.103506
Mayer, R. E. (2005). Cognitive Theory of Multimedia Learning. In *The Cambridge handbook of multimedia learning* (pp. 31–48). Cambridge University Press. https://doi.org/10.1017/CBO9780511816819.004
Mayer, R. E., & Moreno, R. (2003). Nine Ways to Reduce Cognitive Load in Multimedia Learning. *Educational Psychologist*, *38*(1), 43–52. https://doi.org/10.1207/S15326985EP3801_6
Murphy, J. W., Franz, B. A., Choi, J. M., & Callaghan, K. A. (2017). *Narrative Medicine and Community-Based Health Care and Planning*. Springer International Publishing. https://doi.org/10.1007/978-3-319-61857-9
Nasir, K. M. (2016). Tattooing the Muslim Youth Body. In K. M. Nasir, *Globalized Muslim Youth in the Asia Pacific* (pp. 115–149). Palgrave Macmillan US. https://doi.org/10.1057/9781137542649_5
Nicholson, R. A., Kreuter, M. W., Lapka, C., Wellborn, R., Clark, E. M., Sanders-Thompson, V., Jacobsen, H. M., & Casey, C. (2008). Unintended Effects of Emphasizing Disparities in Cancer Communication to African-Americans. *Cancer Epidemiology, Biomarkers & Prevention*, *17*(11), 2946–2953. https://doi.org/10.1158/1055-9965.EPI-08-0101
Nutbeam, D., & Lloyd, J. E. (2021). Understanding and Responding to Health Literacy as a Social Determinant of Health. *Annual Review of Public Health*, *42*(1), 159–173. https://doi.org/10.1146/annurev-publhealth-090419-102529
Onuora, C., Torti Obasi, N., Ezeah, G. H., & Gever, V. C. (2021). Effect of dramatized health messages: Modelling predictors of the impact of COVID-19 YouTube animated cartoons on health behaviour of social media users in Nigeria. *International Sociology*, *36*(1), 124–140. https://doi.org/10.1177/0268580920961333
Resnicow, K., Baranowski, T., Ahluwalia, J. S., & Braithwaite, R. L. (1999). Cultural Sensitivity in Public Health: Defined and Demystified. *Ethnicity & Disease*, *9*(1), 10–21.
Roque, L. S., & Rumsey, A. (2012). Getting the Story Straight: Language Fieldwork Using a

Narrative Problem-Solving Task. *LaNguagE DocumENtatIoN*, *6*.
Shaffer, V. A., Focella, E. S., Hathaway, A., Scherer, L. D., & Zikmund-Fisher, B. J. (2018). On the Usefulness of Narratives: An Interdisciplinary Review and Theoretical Model. *Annals of Behavioral Medicine*, *52*(5), 429–442. https://doi.org/10.1093/abm/kax008
Shaw, T., Ishak, D., Lie, D., Menon, S., Courtney, E., Li, S.-T., & Ngeow, J. (2018). The influence of Malay cultural beliefs on breast cancer screening and genetic testing: A focus group study. *Psycho-Oncology*, *27*(12), 2855–2861. https://doi.org/10.1002/pon.4902
Shen, F., Sheer, V. C., & Li, R. (2015). Impact of Narratives on Persuasion in Health Communication: A Meta-Analysis. *Journal of Advertising*, *44*(2), 105–113.
Stormacq, C., Van Den Broucke, S., & Wosinski, J. (2019). Does health literacy mediate the relationship between socioeconomic status and health disparities? Integrative review. *Health Promotion International*, *34*(5), e1–e17. https://doi.org/10.1093/heapro/day062
Sun, S., Li, S.-T., & Ngeow, J. (2020). Factors shaping at-risk individuals' decisions to undergo genetic testing for cancer in Asia. *Health & Social Care in the Community*, *28*(5), 1569–1577. https://doi.org/10.1111/hsc.12981
Sweller, J. (1988). Cognitive Load During Problem Solving: Effects on Learning. *Cognitive Science*, *12*(2), Article 2. https://doi.org/10.1207/s15516709cog1202_4
Sweller, J. (2011). Cognitive load theory. In *The psychology of learning and motivation: Cognition in education, Vol. 55* (pp. 37–76). Elsevier Academic Press. https://doi.org/10.1016/B978-0-12-387691-1.00002-8
Thomas, S. B., Fine, M. J., & Ibrahim, S. A. (2004). Health Disparities: The Importance of Culture and Health Communication. *American Journal of Public Health*, *94*(12), Article 12. https://doi.org/10.2105/ajph.94.12.2050